ALPHA MICROSYSTEMS
RIGHT. FROM THE START

AM-648
Digital Audio Tape (DAT) High Capacity Tape Drive Installation Instructions

PDI-00648-00, Rev. A00

© 1995 Alpha Microsystems

REVISIONS INCORPORATED	
REVISION	DATE
A00	December 1994

AM-648 DAT High Capacity Tape Drive Installation Instructions
To re-order this document, request part number PDI-00648-00.

The information contained in this manual is believed to be accurate and reliable. However, no responsibility for the accuracy, completeness or use of this information is assumed by Alpha Microsystems.

This document was written and illustrated by Dan Twaddell.

This document may contain references to products covered under U.S. Patent Number 4,530,048.

The following are registered trademarks of Alpha Microsystems, Santa Ana, CA 92799:

AMIGOS	AMOS	Alpha Micro	AlphaACCOUNTING
AlphaBASIC	AlphaCALC	AlphaCOBOL	AlphaFORTRAN 77
AlphaLAN	AlphaLEDGER	AlphaMAIL	AlphaMATE
AlphaNET	AlphaPASCAL	AlphaRJE	AlphaWRITE
CASELODE	OmniBASIC	VER-A-TEL	VIDEOTRAX

The following are trademarks of Alpha Microsystems, Santa Ana, CA 92799:

AlphaBASIC PLUS	AlphaVUE	AM-PC	AMTEC
DART	ESP	MULTI	inSight/am
inFront/am			

All other copyrights and trademarks are the property of their respective holders.

ALPHA MICROSYSTEMS
3511 Sunflower
P.O. Box 25059
Santa Ana, CA 92799

TABLE OF CONTENTS

1.0 INTRODUCTION 1

2.0 PRODUCT DESCRIPTION 1

3.0 TOOLS REQUIRED 2

4.0 PREPARING THE DAT DRIVE FOR INSTALLATION 2

5.0 SCSI BUS TERMINATION 4
5.1 SCSI Termination Using External Terminator Option 4
5.2 Termination Procedure (Without External Terminator) 6

6.0 TERMINATION POWER 6

7.0 DAT TAPE DRIVE INSTALLATION INSTRUCTIONS 8

8.0 DAT INSTALLATION (PEDESTAL AND RACK MOUNT COMPUTERS) 8
8.1 Front Bezel Removal and Modification 8
8.2 Building and Installing the DAT Drive Mounting Assembly 9
8.3 Power and Interface Cables (Pedestal and Rack Mount Configurations) 13

9.0 DAT INSTALLATION (AM-990 VME AND SINGLE BOARD COMPUTERS) . . . 13

10.0 SOFTWARE INFORMATION FOR AM-648 DAT DRIVES 15
10.1 Copying the Device Driver Program 16
10.2 Modifying the System Initialization Command File 16
10.2.1 Modifying the Device Table 17
10.3 Testing the Initialization File 17
10.4 Warm Booting 18
10.5 Running Self Test 21

11.0 AM-648 DAT DRIVE STATUS LEDS 22

12.0 USING YOUR AM-648 DAT DRIVE 22

13.0 DAT DRIVE COMPATIBILITY 24

14.0 MAINTENANCE 24

15.0 DDS TAPE USAGE AND CAPACITY 25

16.0 ADDITIONAL DOCUMENTATION 26

1.0 INTRODUCTION

This document describes the installation of an AM-648 **D**igital **A**udio **T**ape (**DAT)** SCSI High Capacity Tape Drive into SCSI-2 compatible AMOS-based Alpha Micro computers. Those wishing to install the AM-648 into an external subsystem will need to use the installation instructions shipped with the subsystem in conjunction with these instructions.

The instructions are written for an experienced Alpha Micro Service Technician, so if you do not feel comfortable performing the hardware and software procedures discussed below, please contact your Alpha Micro dealer or the Alpha Micro Technical Support Group for help.

Installing an AM-648 DAT drive is simply a matter of placing the tape unit inside your computer, connecting the power and interface cables, configuring the software driver, and identifying the new device in your system initialization command file.

2.0 PRODUCT DESCRIPTION

The AM-648 DAT tape drive described in this document is only supported on SCSI-2 compatible AMOS based computers. This includes:

- Computers which include Roadrunner upgrades.
- AM-4000 computers.
- Eagle series computers.
- AM-540 enhanced AM-3000M computers.

The SASI port on older AMOS based computers does not support the AM-648 DAT drive.

The small 4mm magnetic tape used in the AM-648 DAT drive has a data capacity of approximately four gigabytes when writing in DDS-DC compression mode. When writing in standard (non-compressed) DDS mode, data capacity is cut in half. Actual data capacity may vary depending on the number and type of files you are saving to the tape. A new AMOS command called TMODE allows you to switch between compressed and non-compressed tape writing modes. Tapes written in standard (non-compressed) DDS mode can be read by AM-647 Archive Python DAT drives.

The AM-648 DAT drive can be mounted in any half-height 5-1/4" configuration. The AM-648 product package consists of a SCSI compatible DAT tape drive and mounting kit. What's included in your mounting kit will depend on what type of computer you have. The table below shows the Alpha Micro part numbers for AM-648 mounting kits:

System Type	Mounting Kit
VME Rack Mount	PDB-00625-60
VME Pedestal	PDB-00625-61
AM-2000M/AM-3000M	PDB-00625-61
AM-1600 Deskside	Not Required
AM-990 VME and SBC	Not required
Eagle Deskside	Not required

Make sure you have the correct mounting kit before you begin. The DAT drive has the same environmental specifications as your computer.

3.0 TOOLS REQUIRED

For most installations, the only tool you will need to install the DAT drive is a #2 phillips-head screwdriver.

4.0 PREPARING THE DAT DRIVE FOR INSTALLATION

The high-performance SCSI port on your computer supports eight SCSI IDs (0 through 7). SCSI ID 7 is reserved for the host controller; this leaves SCSI IDs 0 through 6 available for SCSI peripherals. If you plan on using the AM-648 as a warm boot device, it must be set to a higher numerical SCSI ID than any other magnetic tape device connected to your SCSI bus. When configuring the SCSI ID for the AM-648, make sure you do not select a SCSI ID already in use by another SCSI device. Each SCSI device must have a unique SCSI ID; SCSI IDs cannot be shared.

The illustration on the next page shows all possible SCSI ID selections for the AM-648 DAT drive. The illustration also shows the drive jumpered for SCSI-2 operation, which is correct for all configurations discussed in this document.

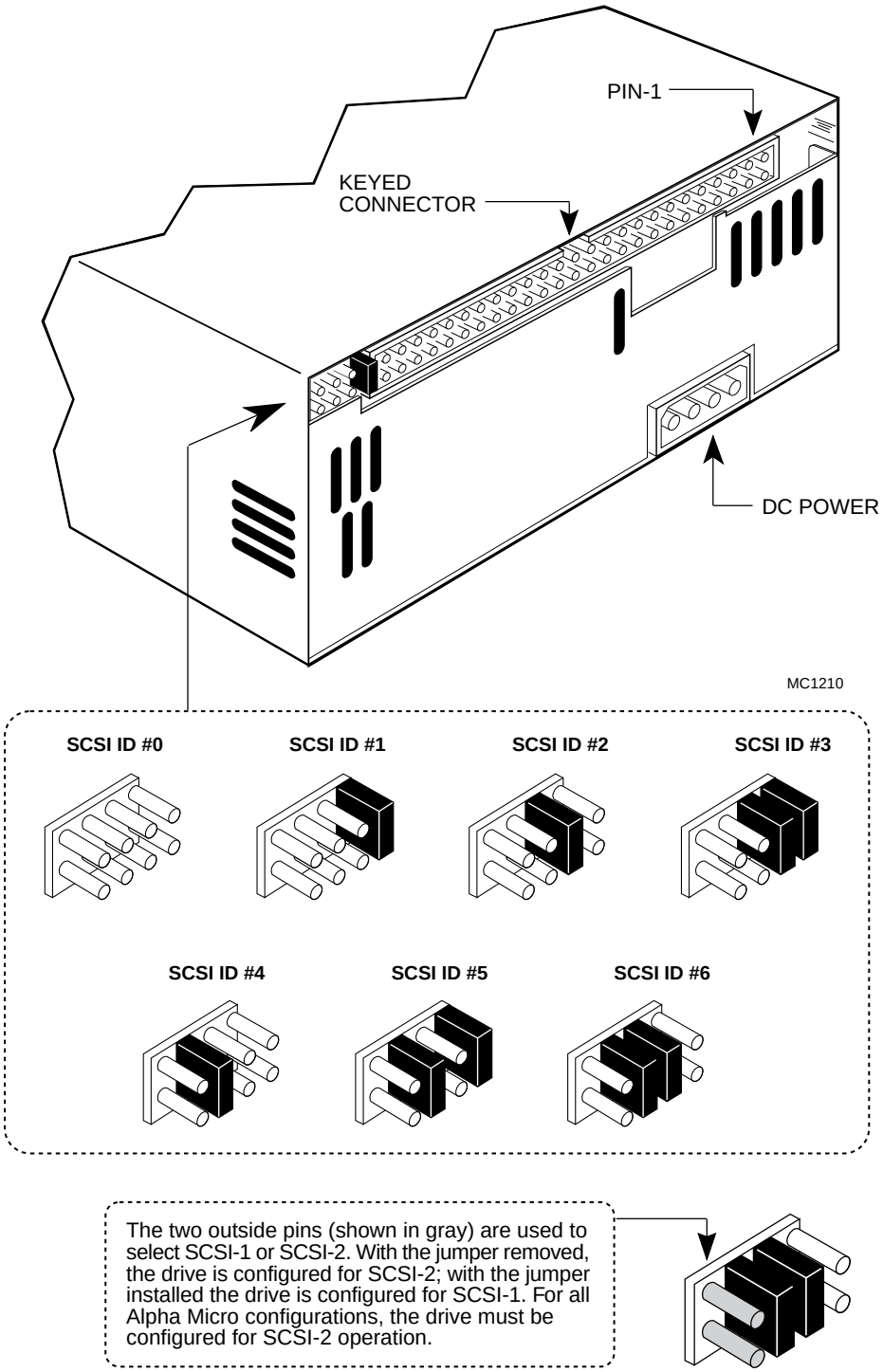

Figure 1. AM-648 DAT Drive Jumper Configuration

5.0 SCSI BUS TERMINATION

In order to function properly, the SCSI bus on your computer must be terminated at each end. The SCSI controller handles the termination at one end of the bus; the opposite end of the bus can be terminated in one of two ways: 1) installing on-board terminators in the peripheral cabled farthest away from the SCSI controller; 2) using the preferred method—an external terminator.

An illustration showing the AM-648 DAT drive with its terminators installed is shown below.

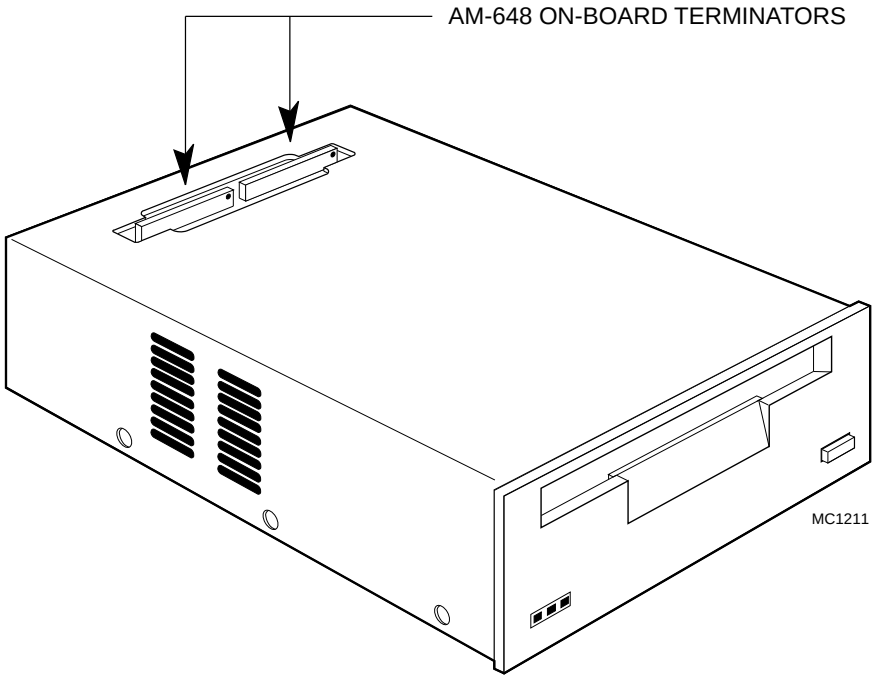

Figure 2. AM-648 DAT Drive On-Board Terminators

The on-board terminators will remain installed only if you are not using an external terminator and the AM-648 DAT drive is the SCSI device cabled farthest away from the host controller. Under all other conditions, the on-board terminators will be removed. The next two sections provide more information about SCSI bus termination.

5.1 SCSI Termination Using External Terminator Option

The preferred method of terminating the SCSI bus in an AMOS based computer is the installation of an external terminator. In Early April of 1993, the external SCSI bus terminator became standard on all factory integrated AMOS based computers. Using an external terminator makes the task of installing an add-on subsystem (like a portable CD-ROM drive) easier, eliminating the necessity of removing terminators from a SCSI device located in the host computer.

External terminators are available from Alpha Micro under part number PRA-00222-00.

To use the external terminator, you need to insure none of your SCSI peripherals inside the computer are terminated. You will also need to follow the guidelines in the section on providing termination power for the SCSI bus.

If you have a 10 or 21-slot rack mount VME computer and want to install an external terminator, you will need to order a special adapter cable, DWB-10200-01. The adapter cable is required because there is no external SCSI connector on these computers. The special cable has a connector that's compatible with the external terminator and also allows easy access to your computer for a portable CD-ROM drive or other SCSI subsystem.

The external terminator is shown below:

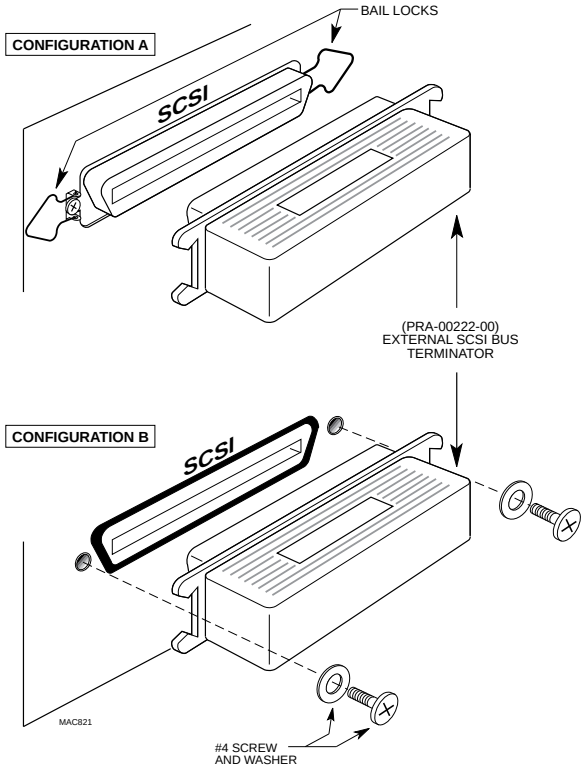

Figure 3. External Terminator Installation

The illustration shows two different types of external SCSI connectors:

1. "Configuration "A" shows an extended external SCSI connector with bail locks for holding the terminator in place. This configuration is used on almost all of Alpha Micro's currently available product. The terminator is installed by sliding it over the connector and then latching the bail locks into the notches in the terminator.

2. Configuration "B" shows a flush mounted external SCSI connector. The only product Alpha Micro currently offers using a flush mounted external SCSI connector is the pedestal (also known as the "Classic") chassis. In this configuration, the terminator inserts into a cutout in the sheet metal and over the SCSI connector. The terminator is held in place with two #4 screws and washers.

5.2 Termination Procedure (Without External Terminator)

1. All AMOS based computers with one SCSI hard disk drive must have that drive installed with its terminators installed.

2. All AMOS based computers with more than one SCSI device must insure that only the last SCSI device, the device attached to the connector located farthest down the cable away from the CPU board, has its terminators installed. Any other SCSI devices must have their terminators removed.

3. All AMOS based computers with a SCSI magnetic tape drive as their only SCSI device must have that tape drive configured with its terminators installed.

4. For subsystem installations used in AMOS based applications, the last SCSI device attached to the connector located farthest down the cable away from the host computer must have its terminators installed.

6.0 TERMINATION POWER

In order to properly control SCSI bus termination, a termination power source must be provided; **this is especially important when using an external terminator.**

Why is Termination Power so important when using an external terminator?

In order for terminators to do their job, they must have a power source. In most (but not all) cases, a SCSI peripheral will supply termination power to its own on-board terminators, even if the SCSI host controller or no other SCSI peripheral is supplying termination power to the SCSI bus. However, for an external terminator to be effective, there has to be termination power supplied to the SCSI bus. If no termination power is available, the external terminator is not going to do its job, which means your SCSI bus is not terminated. This may result in a computer that either won’t boot or once booted may tend to hang frequently. Because SCSI-2 devices transfer data at a higher rate, they are more prone to display problems when improperly terminated.

AMOS based computers with SCSI-2 implementation (i.e., AM-4000 computers, AM-540 enhanced AM-3000M computers, Eagle series, all Roadrunner enhanced

computers, etc.) should be configured to supply termination power via the host controller. When termination power is supplied by the host controller, it is not necessary to have one of your internally mounted SCSI peripherals configured to supply termination power to the SCSI bus.

SCSI-2 Bus Termination Power Guidelines

Use these guidelines for supplying termination power to AM-4000 computers, Roadrunner enhanced computers, AM-540 enhanced AM-3000M computers, etc:

1. AMOS based computers with SCSI-2 implementation will be configured with the host controller supplying termination power to the SCSI bus.

2. When the SCSI host controller is supplying termination power, you want your internally mounted SCSI peripherals to be configured so they do not supply termination power.

3. If a computer with one or more SCSI peripherals is cabled to a subsystem with additional SCSI devices, the SCSI devices in the subsystem should be configured so they **do not** supply termination power. Ideally, you want the SCSI host controller in the main system to be the sole source of termination power.

The SCSI host controllers on AM-137, AM-190, and AM-540 boards are permanently configured to supply termination power to the SCSI bus. On Roadrunner boards, the termination power feature can be enabled or disabled by setting a jumper. As of July 26th, 1994, Alpha Micro began configuring all Roadrunner boards with termination power enabled. See the Roadrunner installation instructions for information on how to configure the termination power jumper.

For information on how to configure terminator power on SCSI hard disk and magnetic tape peripherals, see the following documents:

- Each SCSI disk drive shipped by Alpha Micro has a one page notice with jumper configuration information, including instructions on how to configure termination power.

- *AM-62X SCSI 1/4" Streaming Tape Drive Installation Instructions*, PDI-00625-00, revision A07 or later.

- *AM-647 DAT Tape Drive Installation Instructions,* PDI-00647-00, revision A04 or later.

- *AM-648 DAT Tape Drive Installation Instructions,* PDI-00648-00, revision A00 or later.

7.0 DAT TAPE DRIVE INSTALLATION INSTRUCTIONS

The instructions in this document describe how to install a DAT drive into the following configurations:

1. Rack mount VME computers.

2. VME and single board pedestal "Classic" computers.

The computer owner's manuals for Eagle, AM-1600 Deskside, and AM-990 computers contain their own set of instructions for installing SCSI peripherals. However, you will still need to follow all the instructions in this document dealing with software configuration and actual use of the AM-648 DAT drive.

8.0 DAT INSTALLATION (PEDESTAL AND RACK MOUNT COMPUTERS)

The following sections describe how to install a DAT drive into SCSI-2 compatible rack mount and pedestal enclosures. The basic installation procedure is the same for both pedestal and rack mount computers:

- Remove your front bezel.
- Create a cutout in your bezel to support the DAT drive.
- Build the DAT drive mounting assembly.
- Install the DAT drive mounting assembly in your computer.
- Attach the 50-pin interface and power cables.

8.1 Front Bezel Removal and Modification

Your AM-648 product installation kit includes instructions describing how to modify your front bezel. The modification requires that you make a single half-height 5-1/4" cutout if you are only installing a single DAT drive; a full-height 5-1/4" cutout is required if you are installing your DAT drive in conjunction with a new (or existing) diskette or Tandberg streaming tape drive.

1. Follow the instructions in your computer owner's manual for removing your computer's top cover.

2. Unplug the ribbon cable that links the display panel on the computer's front bezel to your CPU board.

3. Remove the phillips-head screws holding the front bezel to the computer's chassis.

4. Included with your installation kit, you will find instructions explaining how to create the proper opening in your bezel to support the DAT drive. Follow the bezel modification instructions and then reinstall the bezel on your computer.

5. Don't forget to plug the display panel cable back into your CPU board.

8.2 Building and Installing the DAT Drive Mounting Assembly

The DAT drive mounting assembly is the same for both pedestal and rack mount computers. The assembly consists of three pieces: one plastic mounting base; one DAT drive; and one metal support bracket. The following steps describe how the assembly is put together:

1. The drive sets on top of the plastic mounting base with its status LEDs located nearest the plastic mounting base. This will insure the drive is in its proper operational position for both pedestal and rack mount computers. Also, when positioned as shown in Figure 4, pin-1 on the DAT drive's SCSI connector will have the same orientation as other SCSI devices in your computer.

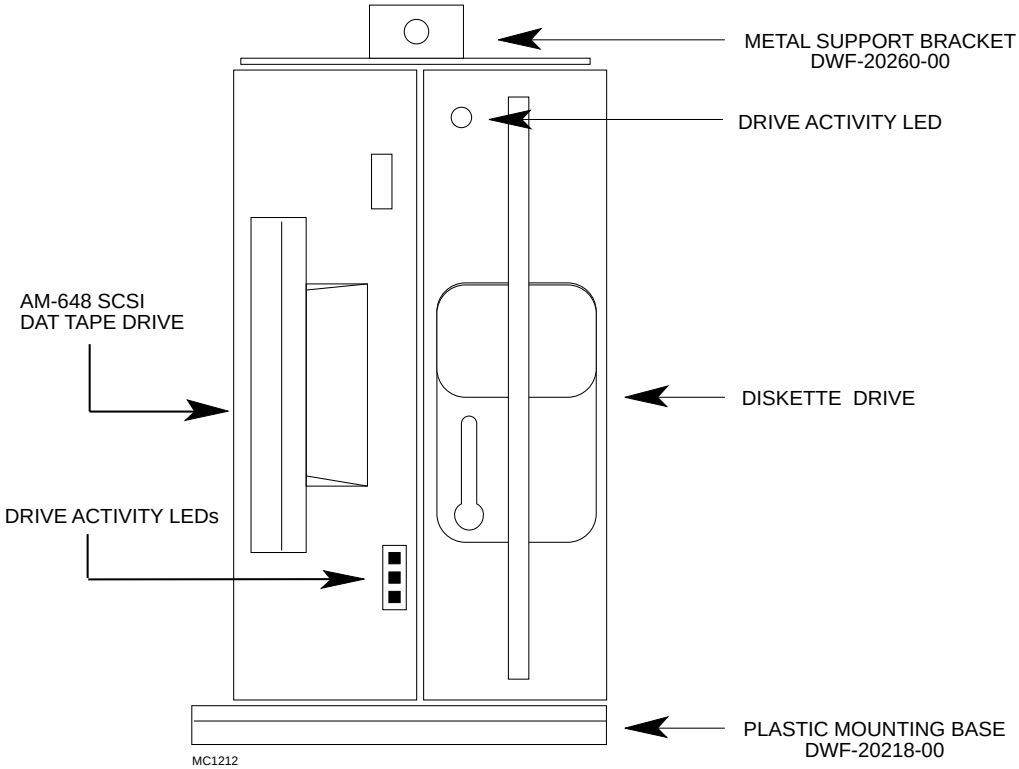

Figure 4. DAT Tape Drive Mounting Assembly

2. The DAT drive has several mounting screw-holes on its side rails, which align with corresponding holes in the plastic mounting base.

3. Align the screw holes on the DAT drive with the designated holes in the plastic mounting base. Make sure the drive's front panel is pointed in the direction indicated by the arrow in Figure 5.

4. Install the two screws (included in the mounting kit) that hold the plastic mounting base to the DAT drive. If you are installing a diskette drive or a 1/4" streaming tape drive along with your DAT drive, this drive would be mounted next to the DAT drive, as shown in Figure 4.

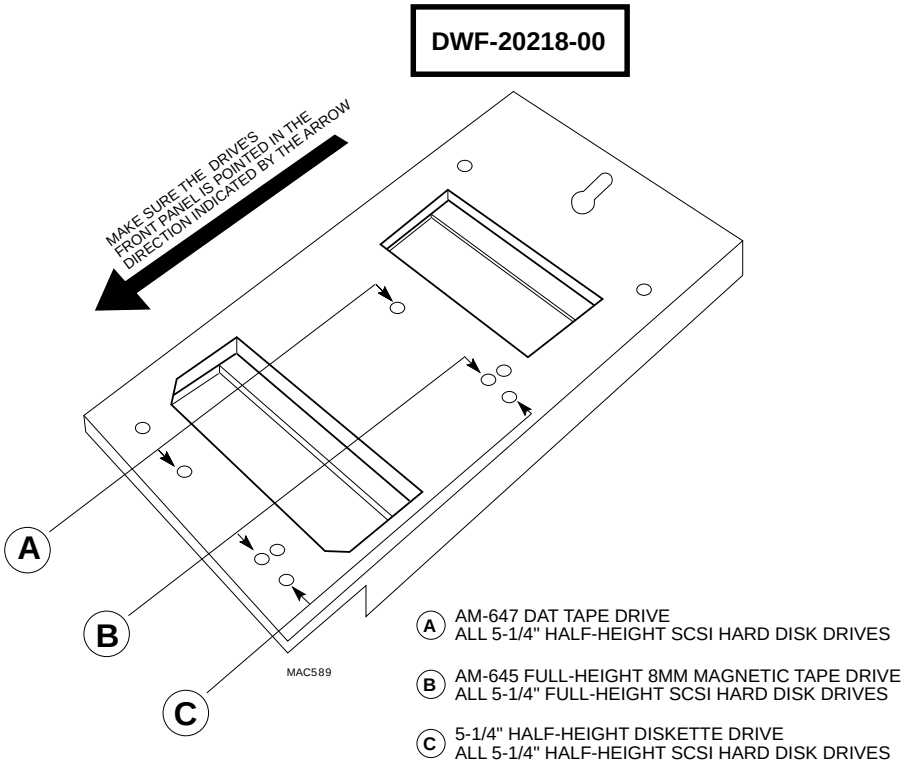

Figure 5. Plastic Mounting Base

5. Set the drive assembly into its mounting position inside the chassis.

6. The metal support bracket sets on top of the drive assembly as shown in Figure 4. Position the bracket so the mounting hole shown in Figure 6 aligns with the screw hole on the side of the DAT drive. At the same time, the screw hole in the metal support bracket designed to secure the drive assembly to the front bezel must align with the screw hole in the front bezel.

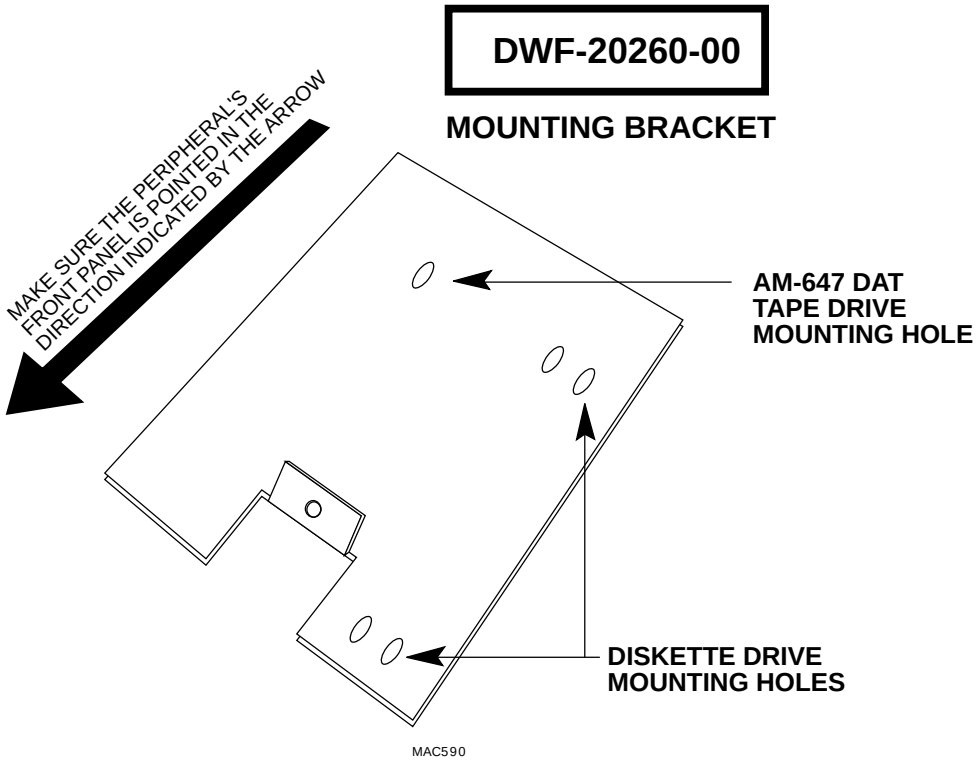

Figure 6. Metal Support Bracket

7. Before you tighten the screw holding the DAT drive to the metal support bracket, make sure you are satisfied with the way the drive assembly is aligned with the cutout in your computer's front bezel. Once the drive (or drives) are properly positioned, install the screw that holds the plastic mounting base to the chassis bottom and tighten the screw holding the drive (or drives) to the metal support bracket. Finally, tighten the screw that secures the drive assembly to the front bezel as shown in Figure 7.

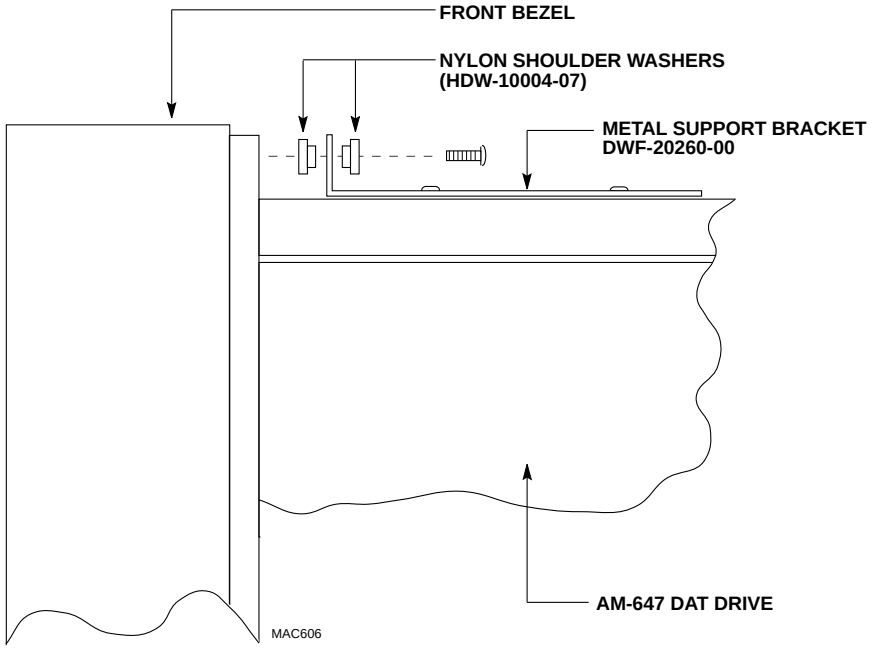

Figure 7

8.3 Power and Interface Cables (Pedestal and Rack Mount Configurations)

The 50-pin SCSI cable is already installed in your computer. On some computers, the 50-pin SCSI interface cable has keyed connectors that insure a pin-1 to pin-1 connection with the AM-648 DAT drive. If your interface cable is not keyed, you must use red stripe on the cable as a pin-1 reference.

Plug a 4-pin keyed DC power cable into the corresponding keyed connector on the back of the drive. Figure 1 shows the location of the DAT drive's DC power connector.

9.0 DAT INSTALLATION (AM-990 VME AND SINGLE BOARD COMPUTERS)

Plastic mounting rails are used to install a DAT tape drive into an AM-990 Universal Enclosure. Two rails are required to mount a peripheral device. The rails (DWF-20652-00) are universal; they can be mounted on either the right or left hand side of the peripheral. Figure 8 shows an illustration of the rail and explains how it is installed on various types of peripherals, including the AM-648 DAT tape drive:

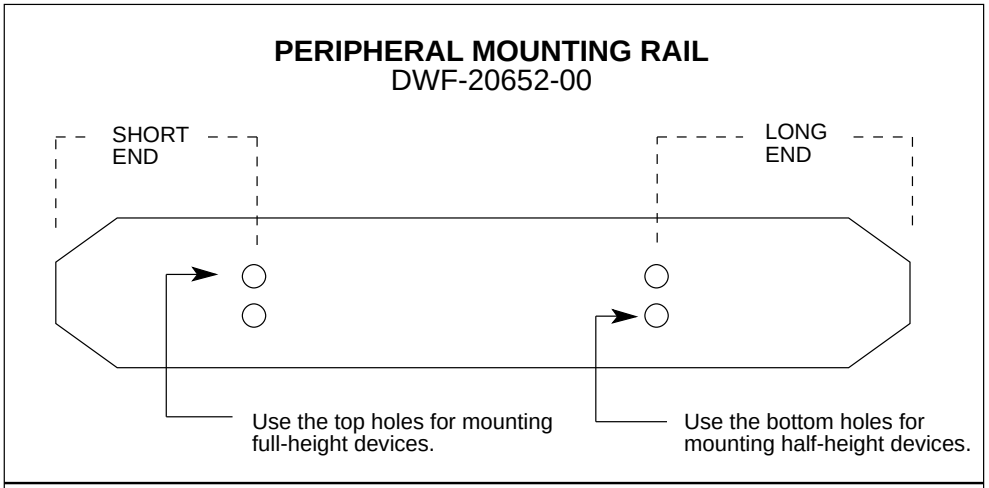

SHORT END

For Tandberg 1/4" streaming tape drives and all hard disk drives, mount the rails with the short end pointing toward the rear of the computer cabinet.

LONG END

For **AM-648 DAT drives**, mount the rails with the long end pointing toward the rear of the computer cabinet.

MC1215

Figure 8 — Peripheral Mounting Rails

Figure 9 shows the basic peripheral/rail assembly. Besides the rails, the peripheral mounting kit includes both standard and metric screws for compatibility with all of Alpha Micro's 5-1/4" peripherals.

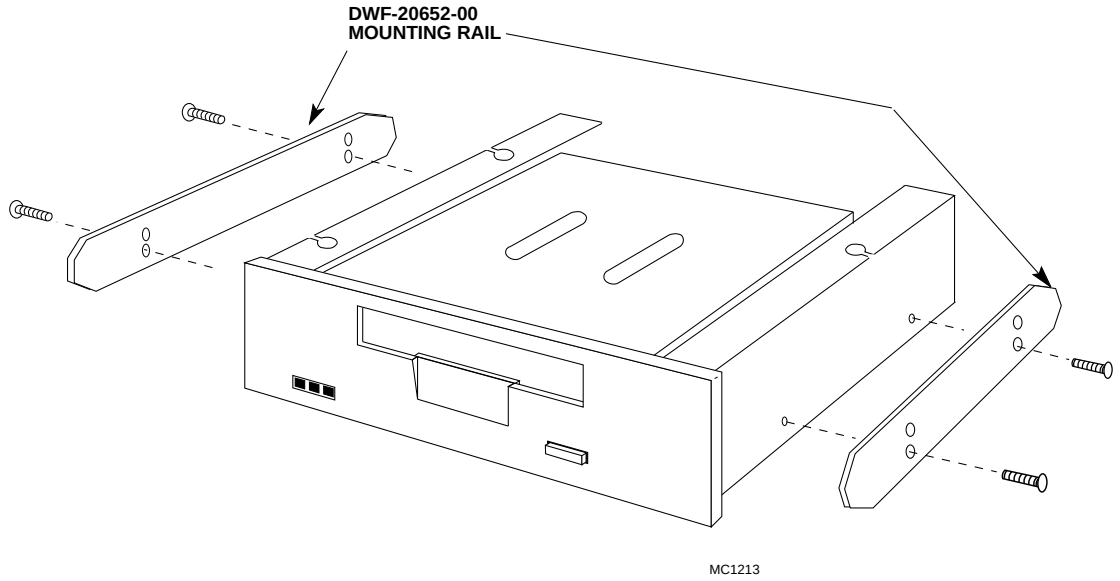

Figure 9 — Attaching Mounting Rails to Peripheral

The AM-648 DAT drive can be mounted as shown above or it can be mounted on either side; however, **the drive should never be mounted upside-down.**

Once the rails are installed, the tape drive can be slid into its mounting position in the chassis. Make a pin-1 to pin-1 connection between the SCSI connector on the back of the drive and the interface cable; plug in the power cable and the installation is complete.

10.0 SOFTWARE INFORMATION FOR AM-648 DAT DRIVES

There are several points to remember when using DAT drives:

- In order for your DAT drive to function properly, your operating system can be no earlier than AMOS 1.4C or AMOS 2.2C.
- The tape drive must be referred to as DAT0:
- The device driver, DAT.DVR, must be loaded into system memory.
- DAT drives use the same tape utility programs used by Alpha Micro's 1/2" magnetic tape drives; MTUSAV, MTUDIR, and MTURES. The use of these programs is documented in the *System Operator's Guide*.

The following file edit versions (or later) are required to support AM-648 DAT tape drives. If your AMOS operating system does not include the versions of the software listed below, you must download the required files from AMTEC+.

For AMOS 1.4C Systems	For AMOS 2.2C Systems
625DVR.DVR	625DVR.DVR
645DVR.DVR	645DVR.DVR
647DVR.DVR	647DVR.DVR
MTUSAV.LIT 3.2(129)	MTUSAV.LIT 3.3(129)
MTURES.LIT 3.2(133)	MTURES.LIT 3.3(133)
MTUDIR.LIT 3.2(127)	MTUDIR.LIT 3.3(127)
TAPSER.LIT 3.0(119)	TAPSER.LIT 3.0(119)
WRMGEN.LIT 2.0(161)	WRMGEN.LIT 2.0(161)
CRT620.LIT 2.0(114)	CRT620.LIT 2.0(114)
TMODE.LIT 1.0(100)	TMODE.LIT 1.0(100)

If you receive your AM-648 DAT drive as part of a factory integrated computer, all the files listed above will be included with your AMOS operating system.

10.1 Copying the Device Driver Program

You need to create a three character driver name to support your AM-648 DAT drive. This name will be used in your system initialization command file to define the AM-648. Use the following commands to create a driver called DAT.DVR:

```
LOG DVR: RETURN

COPY DAT.DVR=647DVR.DVR RETURN
```

Why use 647DVR.DVR as the driver for your AM-648 DAT drive? The 647DVR.DVR program supports both AM-647 and AM-648 DAT drives.

10.2 Modifying the System Initialization Command File

To define the DAT drive on your computer, use the COPY command to make a copy of your system initialization command file, calling it TEST.INI. Then edit that copy using the AlphaVUE text editor, making the modifications discussed in the following sections.

NEVER modify the system initialization command file directly. Always make a copy and name it, for example, TEST.INI. Make the modifications described below in that test file. When you have finished, use MONTST at AMOS command level to test it.

Type the following commands to create a test system initialization command file. For example, if your computer uses a system initialization command file called AMOS32.INI, you would enter these commands:

```
LOG SYS: RETURN

COPY TEST.INI=AMOS32.INI RETURN
```

10.2.1 Modifying the Device Table

The first thing you need to do in your TEST.INI file is add a new DEVTBL statement. When used in the system initialization command file, DEVTBL tells AMOS which devices to look for on the computer. As AMOS processes the DEVTBL command line, it builds a device table in memory. The file system consults the device table for device assignments. Every time you add a new device to the system, like your DAT drive, you must add it to the system device table.

Locate the DEVTBL statements in your TEST.INI and add one that looks like this:

```
DEVTBL /DAT0
```

The slash preceding the device name lets AMOS know the device is non-sharable.

Since the device driver program needs to be in System Memory, add the following SYSTEM command prior to the final SYSTEM command:

```
SYSTEM DAT.DVR[1,6]
```

The MTUSAV program creates a special job used to communicate with the tape drive when it is executed. Having these two jobs run (one to select files and one to communicate with the DAT drive) allows the extra performance you should see when using MTUSAV.

To increase the number of jobs allocated by the system, search for the line which reads:

```
JOBS nnn
```

This line is normally one of the first commands in the .INI file. Increase the number of jobs allocated by one.

10.3 Testing the Initialization File

When you have finished editing the TEST.INI file, and the new DAT tape drive is attached to the computer with its address jumpers and terminators set properly, press the ESC key and enter an F at AlphaVUE command level to exit. Then log into OPR: (make sure everyone is off your system) and use MONTST to test the TEST.INI file.

When your computer executes the DEVTBL statement, `DEVTBL /DAT0`, located in your system initialization command file, it will display information similiar to what is shown below:

```
SCSI DAT drive (647DVR) version 4.0(133)
DAT0: AM-648 DAT found at SCSI ID: 3
```

The edit version in the above example, 4.0(131), is the minimum version. The edit version displayed on your screen may be later. Also, if you are using an earlier version of 647DVR.DVR that is not AM-648 compatible, you will not see the above message during boot up and your DAT drive will not be functional.

If the computer boots successfully, enter the DEVTBL command at AMOS command level to see a display of the devices on your system; the DAT drive should be listed in the display as DAT0.

If the computer doesn't boot successfully, or if the DAT drive does not appear on the DEVTBL display, press the RESET button to reboot the computer under its original initialization file. Review the changes you made to the TEST.INI, and verify the DAT drive is cabled correctly, and its address jumpers are properly set.

10.4 Warm Booting

It's possible to warm boot from your DAT drive using the CPU boards listed below. However, your boot PROMs must meet the minimum revision requirements listed in the table:

AM-140	Rev. F00
AM-190	Rev. E00
AM-172	Rev. K00
AM-137	Rev. K00
AM-174	Rev. H00

There are no special software considerations to take into account when you use WRMGEN to create your .WRM warm boot file. Keep in mind the DAT drive must be addressed to a higher numerical SCSI ID than any other magnetic tape device on the bus.

An example of a typical routine for generating a warm boot monitor is shown on the next page. The program prompts are shown in plain text and the user input is shown in bold type. The total size of your warm boot monitor cannot exceed 200KB. If you exceed the 200K limit, WRMGEN will generate an overflow error.

When prompted for the system disk driver name, enter SCZRR.DVR as the driver name for Roadrunner and Eagle based computers; enter SCZ190.DVR for AM-4000 and AM-540 enhanced AM-3000M computers. When WRMGEN prompts you to enter the dispatcher name, enter the simple dispatcher name, SIMRR.SYS, for Roadrunner and Eagle based computers; enter SIM190.SYS for AM-4000 and AM-540 enhanced AM-3000m computers. Also, the input monitor name, the bitmap size, the number of logicals, and other configuration specific entries used on the next page are shown for example purposes only; you must enter the monitor name, bitmap size, number of logicals, etc. applicable to your configuration.

```
LOG SYS: RETURN
WRMGEN RETURN

Warm Boot Monitor Generator X.X(XXX)

Input monitor: AMOS32.MON RETURN

System disk driver: SCZRR.DVR RETURN
      Number of logical units: 10 RETURN
      Bitmap size: 3969 RETURN

Language definition table name: RETURN ;Pressing RETURN defaults to English

SCSI dispatcher (RETURN if none): SIMRR.SYS RETURN

System terminal interface driver: AM318.IDV RETURN
      System terminal interface port number: 0 RETURN
      System terminal interface baud rate: 19200 RETURN
      System terminal driver: AM65.TDV RETURN

Enter name of SECONDARY DEVICE(s) to be defined into system,
 one per line. Enter blank to terminate loading.
      Device to define: /DAT0 RETURN
      Device to define: TRM RETURN
      Device to define: RETURN

Enter name of program(s) to be preloaded into SYSTEM MEMORY,
 one per line. Enter blank to terminate loading.
      Program to load: SYSMSG.USA RETURN
      Program to load: STR.DVR[1,6] RETURN
      Program to load: CMDLIN.SYS RETURN
      Program to load: SCNWLD.SYS RETURN
      Program to load: RETURN

Enter name of program(s) to be preloaded into USER PARTITION,
 one per line. Enter blank to terminate loading.
      Program to load: LOG.LIT RETURN
      Program to load: DIR.LIT RETURN
      Program to load: COPY.LIT RETURN
      Program to load: DUMP.LIT RETURN
      Program to load: MTURES.LIT RETURN
      Program to load: MTUDIR.LIT RETURN
      Program to load: FMTSCZ.LIT RETURN
      Program to load: FMTSCZ.OVR RETURN
      Program to load: DSKANA.LIT RETURN
      Program to load: DSKDDT.LIT RETURN
      Program to load: SYSACT.LIT RETURN
      Program to load: RETURN       ;after you enter this return, your
                                     AMOSL.WRM file will be created.
```

When you want to warm boot from the DAT drive, you must set the alternate Boot ID switches on the back panel of your computer chassis. The correct switch setting is shown Figure 10 for each of the supported CPU types.

When you use the CRT620 program to create a warm boot tape, the tape will include only the necessary code to perform a warm boot. The CRT620 program will not allow you to save any data to the tape.

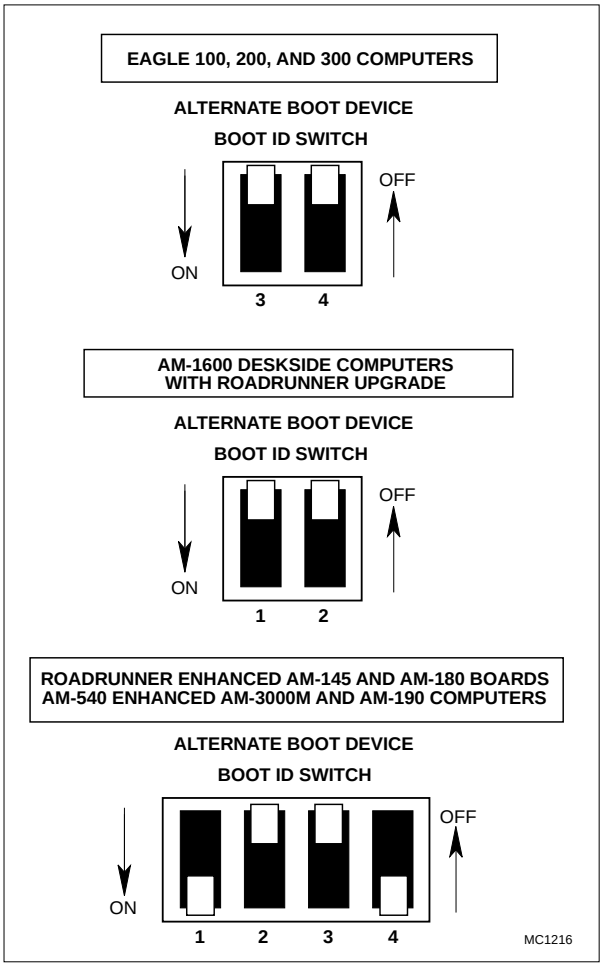

Figure 10

10.5 Running Self Test

Now that the DAT has been installed, you may want to run the system self test, once the computer is up and running, to be sure your computer system is operating correctly. Refer to your computer Owner's Manual for complete step-by-step instructions and interpretation of the self test.

11.0 AM-648 DAT DRIVE STATUS LEDS

The front panel of the AM-648 DAT drive has three status LEDs:

- The green LED will always be lit whenever power is turned on.
- The orange LED is lit when the DAT drive is processing data or commands.

Never press the tape eject button while the orange LED is on.

- The yellow LED indicates the DAT drive requires cleaning. Do not clean the drive prior to the yellow LED being lit.
- When all LEDs are flashing, this indicates an error has occurred. The error can be cleared by turning the power off and then back on again.

12.0 USING YOUR AM-648 DAT DRIVE

The DAT drive is very simple to use:

1. In order to save data to the tape, the window on the tape cartridge must be in the write enable position. Figure 11 shows the tape window in both "write enable" and "write protected" positions.
2. The 4mm tape inserts as shown in Figure 11. As you insert the tape through the tape door, the DAT drive takes over the load operation by mechanically pulling the tape cartridge into the load position, just like your home VCR.

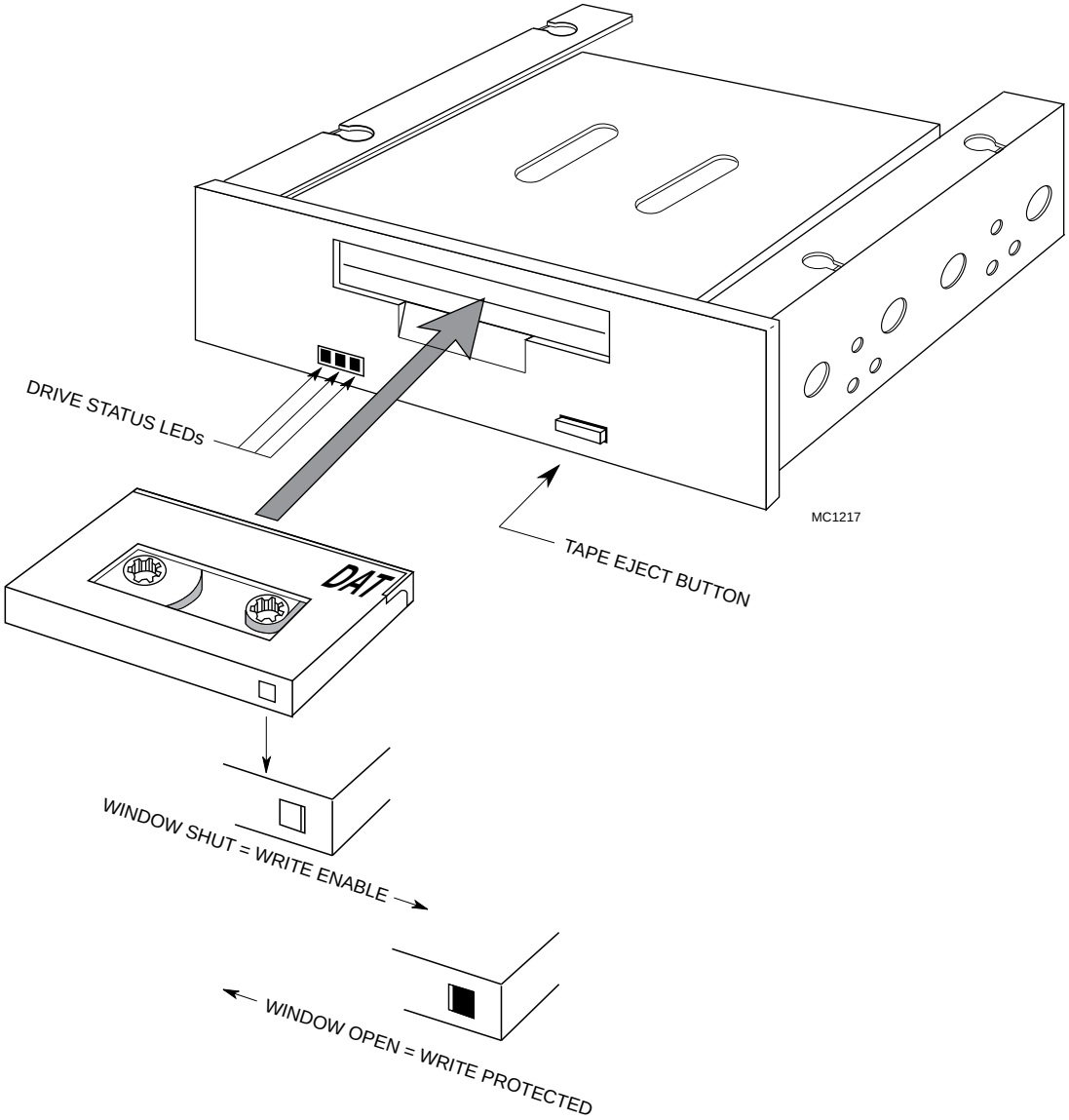

Figure 11. DAT AM-648 Tape Drive.

3. Once the tape is loaded, the status LEDs will indicate the status of both drive and cassette.

4. Use the MTUSAV command to copy a few files onto a blank tape cartridge, and then use the MTURES command to restore them into a different disk account, or onto another logical disk. The MTUDIR command will list the files stored on the tape cartridge.

5. To unload the tape cartridge from the AM-648 DAT drive, you press the tape eject button, which is shown in Figure 11. The drive will automatically eject the tape.

13.0 DAT DRIVE COMPATIBILITY

As a default, the AM-648 DAT drive writes data in compressed mode; this compressed data cannot be read by the AM-647 DAT drive. However, by using the TMODE command, you can force the AM-648 DAT drive to write in standard DDS (non-compressed) mode. Data written in standard DDS mode can be read by the AM-647 DAT drive.

The TMODE command allows you to switch between compressed and non-compressed write modes. The program will display both write options when you enter the TMODE command:

```
TMODE DAT0: RETURN

        Recording format: DDS-DC (compression)

Options for this drive:

         DDS    - standard 2Gb format
         DDS-DC - compressed 4Gb format
```

To force the AM-648 drive to write in standard DDS (non-compressed) mode, enter this command at the AMOS prompt:

```
TMODE DAT0: DDS RETURN
```

To return to compressed mode, enter this command at the AMOS prompt:

```
TMODE DAT0: DDS-DC RETURN
```

The AM-648 DAT drive will automatically read data cartridges written in either standard DDS mode or DDS-DC compressed mode.

14.0 MAINTENANCE

If excessive magnetic dust and debris collects on one or more of the heads, magnetic media may become unreadable and unwriteable. This situation may occur infrequently, or not at all, depending on the media used.

Whenever the yellow LED it lit, you should clean the drive heads with a cleaning cassette.

To clean the heads on the AM-648 DAT drive, use only a qualified DDS DAT cleaning cassette designed for your drive.

The DDS cleaning cassette contains the correct recognition holes to allow the AM-648 DAT drive to recognize that it is a cleaning cassette.

Follow these general guidelines to use the cleaning cassette:

1. Insert the cleaning cassette into the DAT drive. The drive will immediately detect that this is a cleaning cassette.

2. The drive will load and run the cassette and then eject it after the cleaning process is completed.

3. If the cleaning cartridge cartridge does not automatically eject, the cleaning tape has been used up. Press the unload button to eject the cleaning cartridge and discard it.

Do not use an audio DAT cleaning cassette. It will not be properly recognized by your AM-648 DAT drive.

15.0 DDS TAPE USAGE AND CAPACITY

All tapes used in the AM-648 DAT drive should be **computer grade**. Low cost tapes designed for audio DAT drives should **never** be used with the AM-648. Computer grade DAT tapes are made of better materials and therefore will show a lower rate of data errors than audio quality DAT tapes. The computer quality DAT tapes do not "shed" as much magnetic material compared to audio quality DAT tapes and therefore less head cleaning is required. By using computer grade tapes you reduce the possibility of damaging the DAT drive tape heads.

A number of different size tapes are available for the AM-648 DAT drive. We strongly recommend using only 60 and 90 meter tapes. These two tapes yield capacities of approximately 2.6 and 4.0 gigabytes respectively when written in compressed mode. Data capacities will be cut in half when tapes are written in standard (non-compressed) mode.

Alpha Micro stocks the 60 meter (1.3GB) tape under part number PRA-00185-00; the 90 meter (2.0GB) tape is stocked under part number PRA-00184-00.

16.0 ADDITIONAL DOCUMENTATION

There are a number of other documents in the Alpha Micro Documentation library, often far more expanded or tutorial, that amplify the concepts discussed in this document.

Your primary reference source should be your computer Owner's Manual. Subjects in this document that are thoroughly covered in the owner's manual:

1. Physical and electrical specifications.

2. Cooling and system placement.

3. Power requirements and power conversion.

4. Performing the self test.

Another useful document is your *System Commands Reference Manual*. In it you will find reference sheets for the AMOS system software programs and commands mentioned in this document. See your *System Operator's Guide* for a wide variety of system information.